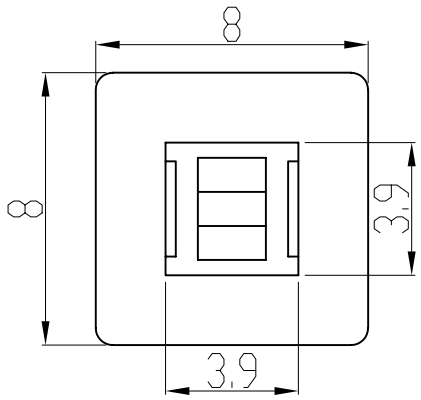

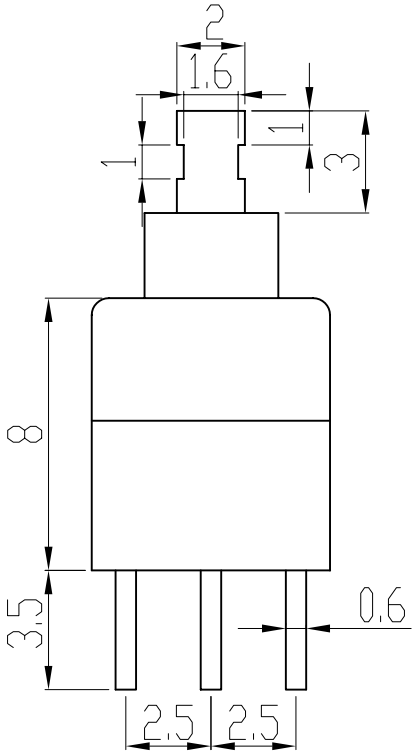

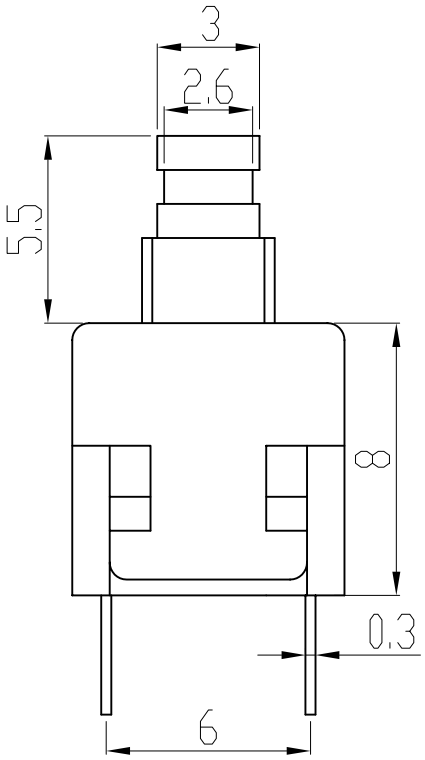

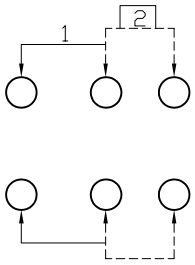

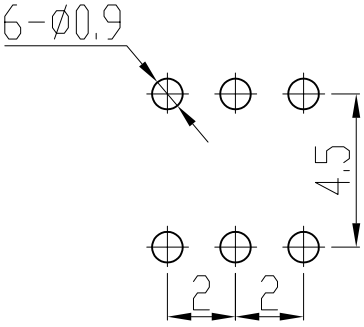

						HRC		PB-22E08