BRIGHT LED ELECTRONICS CORP.

SINCE 1981

- **Customer P/N:**
- **Device Number：BPI-3C1-05**
- **Features:**
  - **Non-contact switching.**
  - **For direct PC board or dual-in-line socket mounting.**
  - **Fast switching s peed.**
  - **This product doesn't contain restriction substance, comply ROHS standard.**

Date \ Sheet	1	2	3	4	5	6		Contents
2001.12.20	1.0	1.0	1.0	1.0	1.0	1.0		Initial Released
2002.01.08	1.1	1.0	1.1	1.0	1.0	1.1		Packaging Dimensions: Pin Length: 9.12mm→3.5mm 2. Packaging Bag Dimensions
2002.03.21	1.2	1.1	1.1	1.0	1.0	1.1		Light Current: IL: max 10Ma→5Ma
2002.12.12	1.3	1.0	1.2	1.1	1.0	1.2		Packaging Dimensions: Slit Width 1.1mm→0.4mm 2.Packaging Bag Dimensions
2004.10.26	1.4	--	-	-	-	-		Features
2004.11.26	2.0	1.0	1.2	1.1	1.0	1.3		Packaging

Total Page	6																

佰鴻工業股份有限公司
BRIGHT LED ELECTRONICS CORP.
台北縣板橋市和平路 19 號 3 樓
3F., No. 19, Ho Ping Road, Pan Chiao City, Taipei, Taiwan, R. O. C.
Tel: 886-2-29591090
Fax: 886-2-29547006/29558809
www.brtled.com.
廣東省東莞市高步鎮蘆溪管理區高龍東路號
No.8 Gaolong eastwayLuxiprecinctGaobu Town Dongguan city Guangdong Province China
Tel：886-0769-8730255 8731855
Fax：886-0769-8733355 8738706
www.brtled.com

Approved	Checked	Drawn

BRIGHT LED ELECTRONICS

● **Device Number：BPI-3C1-05**

● **Absolute Maximum Rating (Ta=25℃)**

Item		Symbol	Rating	Unit
Input	Power Dissipation	Pd	75	mW
	Reverse Voltage	V_R	5	V
	Forward Current	I_F	50	mA
	Peak Forward Current (*1)	I_{FP}	1	A
Output	Collector Power Dissipation	P_C	100	mW
	Collector Current	I_C	40	mA
	C-E Voltage	V_{CEO}	30	V
	E-C Voltage	V_{ECO}	5	V
Operating Temperature		Topr	-25 ~ +85	℃
Storage Temperature		Tstg	-40 ~ +100	℃
Soldering Temperature (*2)		Tsol	260	℃

(*1) tw=100 uSec.、T=10 mSec. (*2) t=5 Sec

● **Electrical Optical Characteristics (Ta=25℃)**

Parameter		Symbol	Condition	Min.	Typ.	Max.	Unit
Input	Forward Voltage	V_F	I_F=20mA	—	1.2	1.5	V
	Reverse Current	I_R	V_R=5V	—	—	100	μA
	Peak Wavelength	λp	I_F=10mA		940		nm
Output	Dark Current	I_D	V_{CE}=10V	—	—	100	nA
	C-E Saturation Voltage	$V_{CE(sat)}$	I_C=0.25mA I_F=10mA	—	—	0.4	V
Light Current		I_L	V_{CE}=5V I_F=10mA	0.5	—	5.0	mA
Speed	Rise Time	Tr	I_{FP}=20mA V_{CE}=5V R_L=1000Ω	—	20	—	μsec
	Fall Time	Tf		—	20	—	μsec

BRIGHT LED ELECTRONICS

- **Device Number：BPI-3C1-05**
- **Package Dimensions**

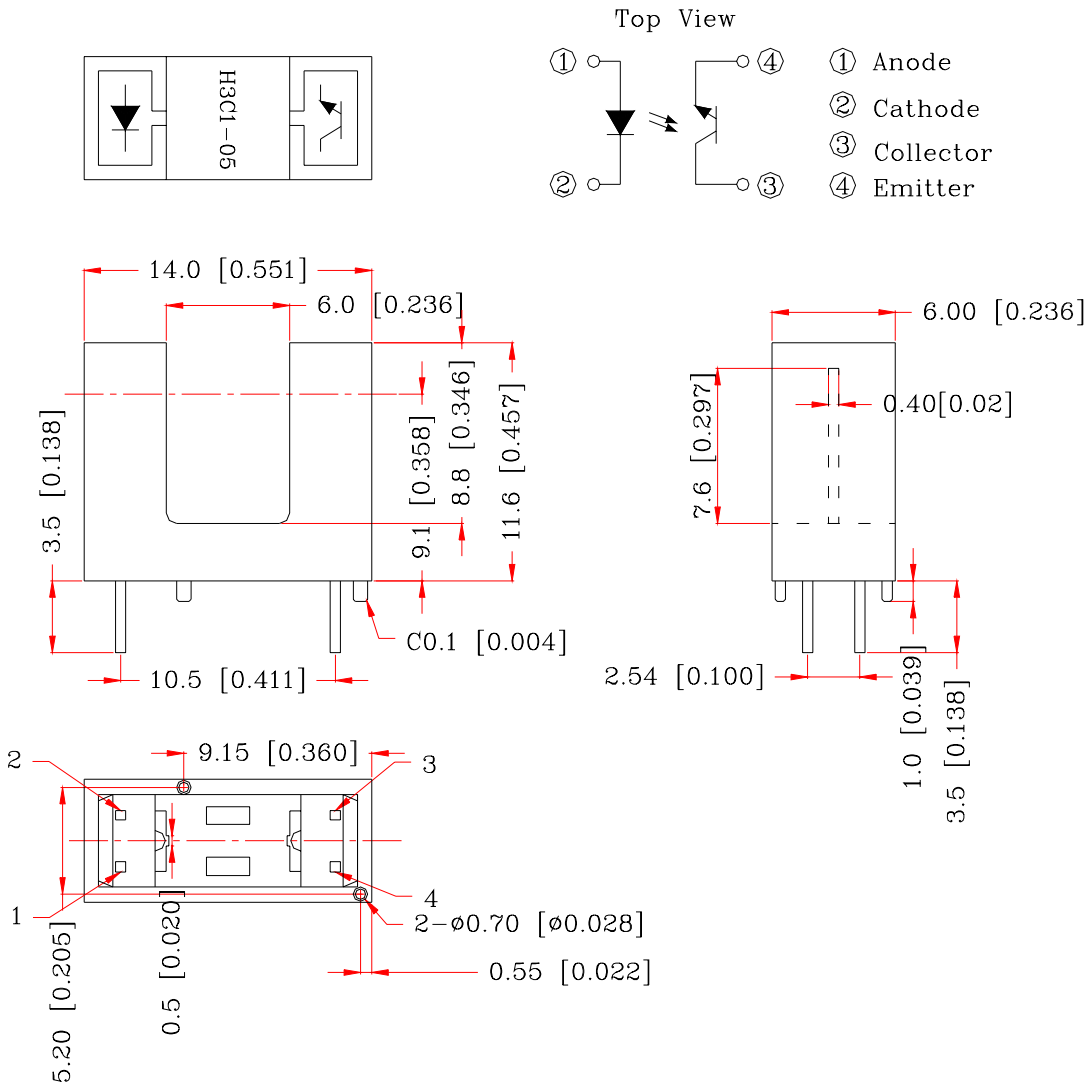

Notes:

1. All dimensions are in millimeters (inches).
2. Tolerance is ±0.25mm unless otherwise specified.
3. Lead spacing is measured where the leads emerge from the package.
4. Specifications are subject to change without notice.

BRIGHT LED ELECTRONICS

- **Device Number：BPI-3C1-05**
- **Typical Electrical / Optical Characteristics Curves (Ta=25℃)**

Fig.1 Power Dissipation vs. Ambient Temperature

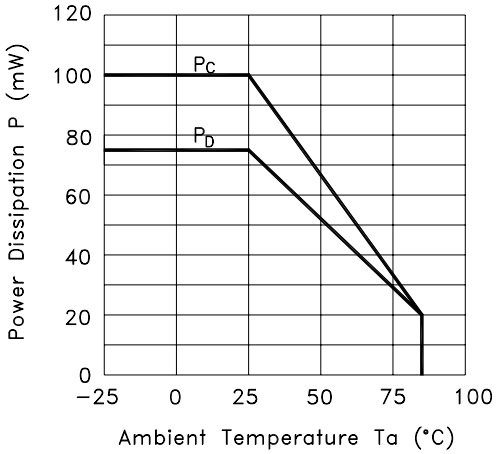

Fig.2 Forward Current vs. Forward Voltage

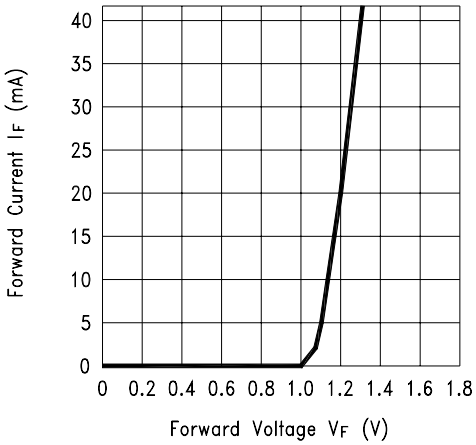

Fig.3 Collector Current vs. Collector−emitter Voltage

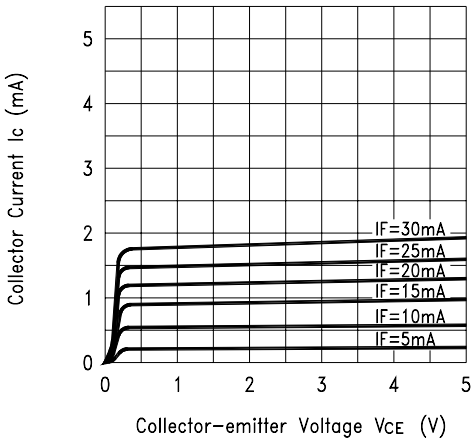

Fig.4 Collector Current vs. Ambient Temperature

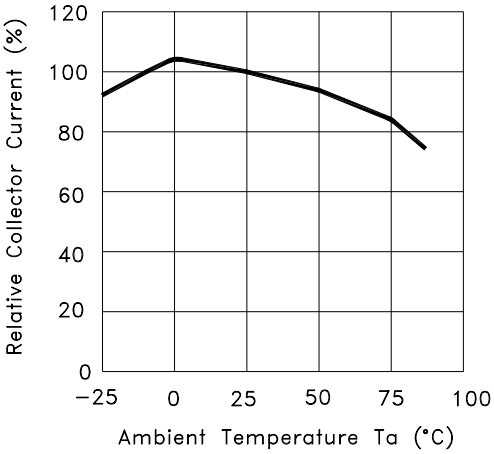

BRIGHT LED ELECTRONICS

- **Device Number：BPI-3C1-05**
- **Typical Electric / Optical Characteristics Curves (Ta=25℃)**

Fig.5 Collector−emitter Saturation Voltage vs. Ambient Temperature

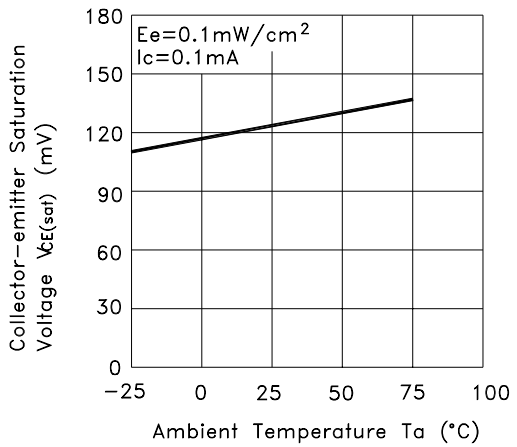

Fig.6 Response Time vs. Load Resistance

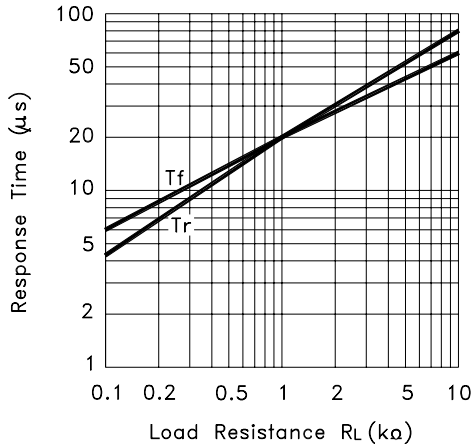

Fig.7 Sensing Position Characteristics (Typical)

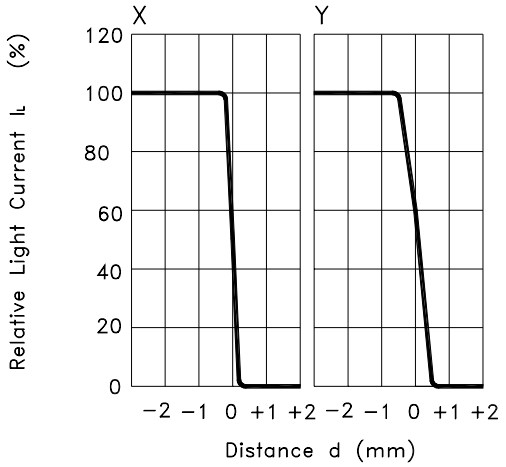

(Center of Optical axis)

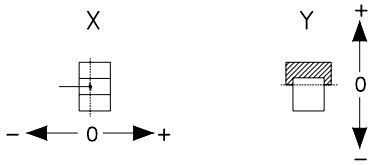

Test Circuit for Response Time

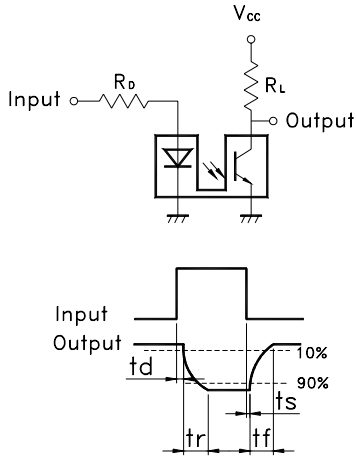

BRIGHT LED ELECTRONICS

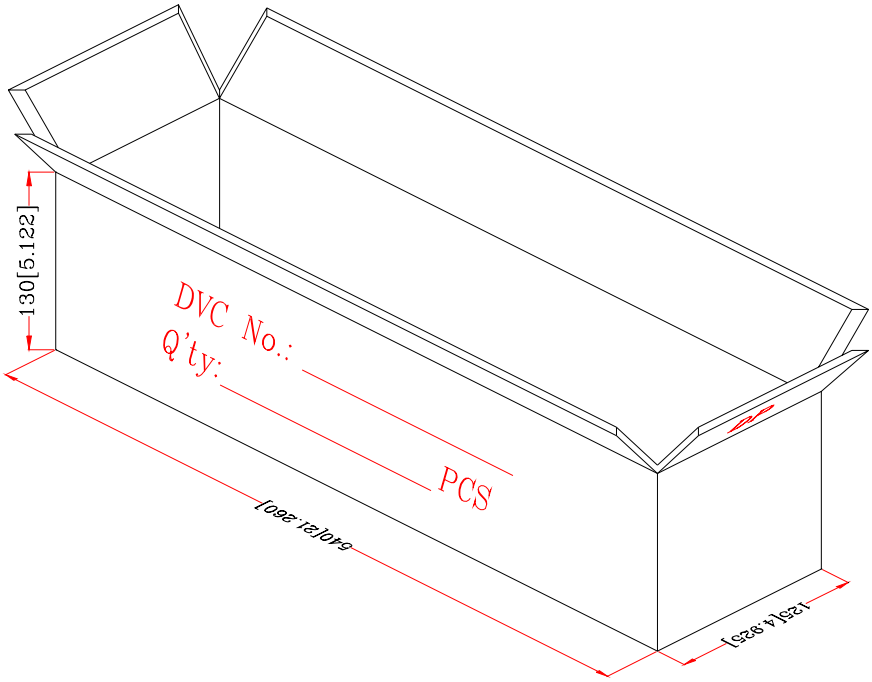

- **Device Number：BPI-3C1-05**
- **Packaging Box Dimensions**

Page: 6
Version: 1.3

- **Packaging Tube Dimensions**

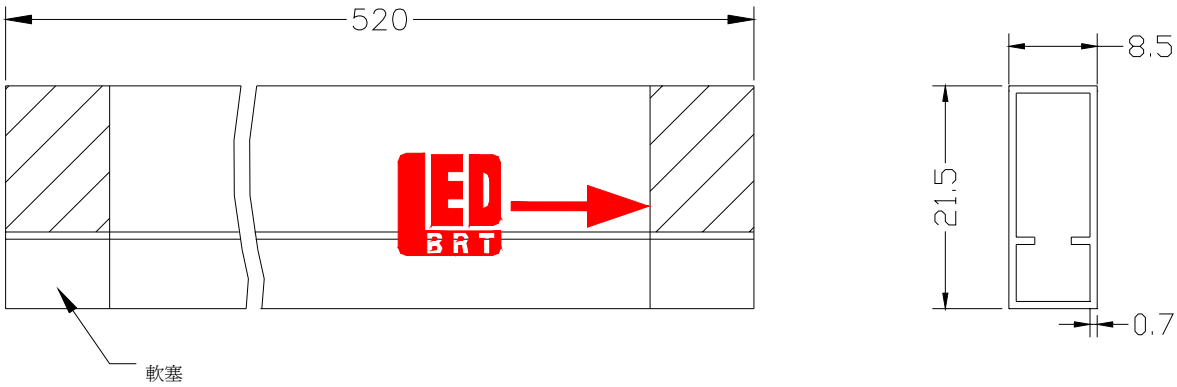

Notes:

1. 35pcs per tube, 2.73kpcs per box.
2. All Dimensions are in millimeters (inches).
3. Specifications are subject to change without notice.