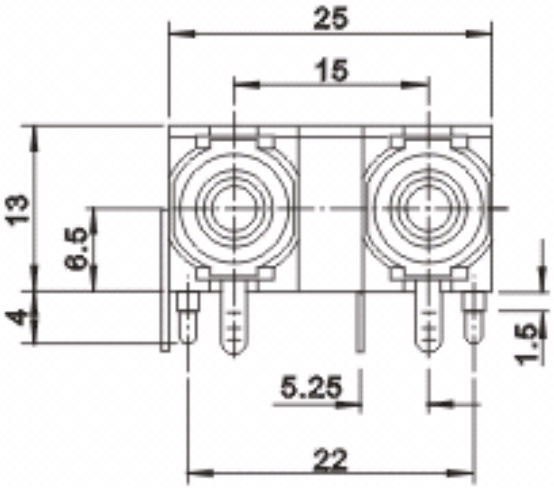

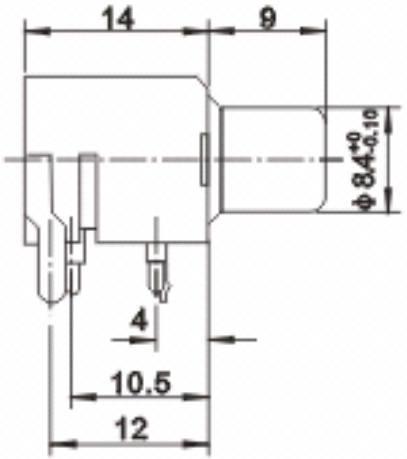

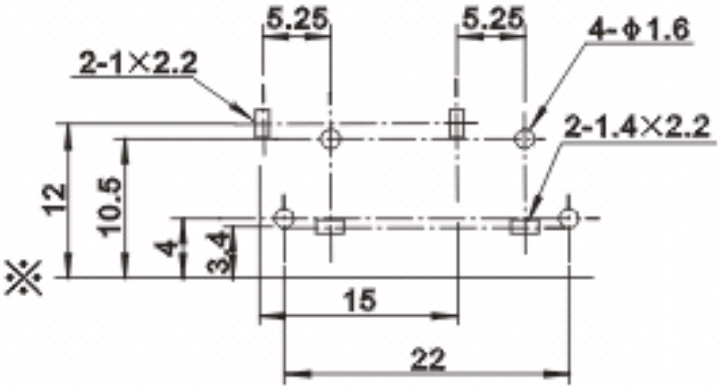

Model No.	RCA-216
Schematic	