LCD MODULE VSTM-1602S

●OUTLINE DIMENSION

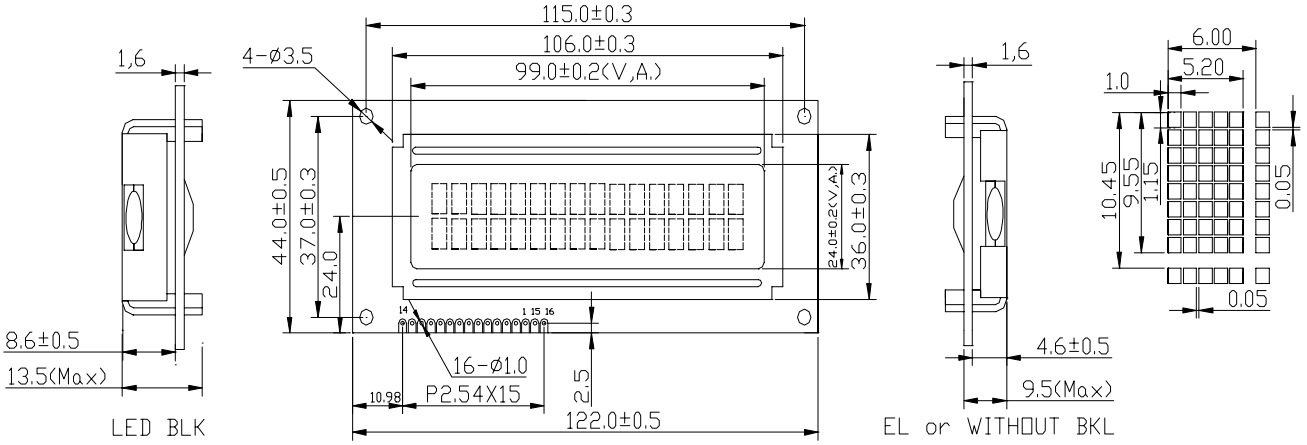

●BLOCK DIAGRAM & POWER SUPPLY

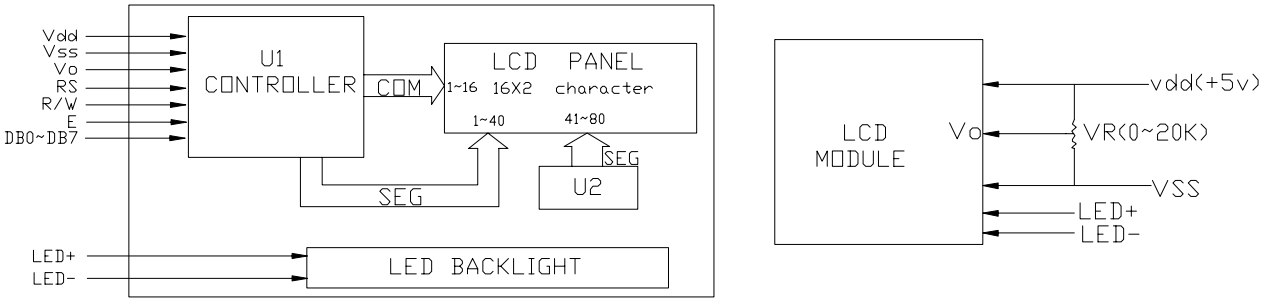

●MECHANICAL SPEC.&FEATURES

Item	Dimension(mm)
Module Size(W×H×T)	122.0×44.0×9.5/13.5
Viewing Area(W×H)	99.0×24.0
Dot Size(W×H)	1.00×1.15
Dot Pitch(W×H)	1.05×1.20
Character Size (W×H)	5.20×9.55
Character Pitch(W×H)	6.0×10.45

Features	
LC Fluid	TN,STN(Yellow-green,Gray,Blue),FSTN
Polarizer	Reflective,Transflective,Transmissive
View Angle	6:00 o'clock or 12:00 o'clock
Display Type	Positive or Negative
Backlight	LED(Optional)
Operating Temp.	0℃～50℃ or -20℃～70℃
Controller	S6A0069 or Equivalent

●INTERFACE PIN CONNECTIONS

Pin No.	Symbol	Function
1	Vss	Ground for logic
2	Vdd	Power supply for logic
3	Vo	Power supply for LCD
4	RS	Register selection(H:Data,L:Instruction)
5	R/W	Read/Write selection(H:R,L:W)

Pin No.	Symbol	Function
6	E	Enable signal
7～14	DB0～DB7	Data bus lines
15	A	BKL+
16	K	BKL-

●ELECTRICAL CHARACTERISTICS

Item	Symbol	Test Condition	Min	Typ.	Max.	Unit
Operating Voltage	Vdd	Ta=25℃	…	5.0	…	V
Operating Voltage for LCD	Vlcd	Ta=25℃	…	4.5	…	V
Supply Current	Idd	Ta=25℃,Vdd=5.0V	…	2.0	3.0	mA
Supply Voltage for LED	Vf	Ta=25℃,R=6.8Ω	…	4.2	…	V
Supply Current for LED	If	Ta=25℃,Vf=4.2V	…	240	…	mA

Vs-Top Electronics Co., Ltd.
1-302, YuanChang Buld,No.100, DongDu RD,Xiamen China 361012Tel: +86-592-6016008. Fax: +86-592-6017711
e-mail: sales@vs-top.com . web: www.goodisplay.com